عالیان صنعت دور

رهنما

تولید گیربکسهای صنعتی

Rahnama

INDUSTRIAL GEARBOXES MANUFACTURER

اولین دریافت کننده گواهینامه کیفی ISO 9001-2000 در صنعت گیربکس

برگزیده شده به عنوان واحد نمونه صنعتی در سال ۱۳۹۰

INDUSTRIAL GEARBOXES MANUFACTURER

Rahnama
INDUSTRIAL GEARBOXES MANUFACTURER

BF30

i	HP_1	KW_1	M_2 daNm	n_2
137.1	0.25	0.18	17.3	9.9
107.6	0.33	0.25	18.3	13
118.3	0.33	0.25	20.5	11.5
124.7	0.33	0.25	21.5	11
137.1	0.33	0.25	24	9.9
87.08	0.4	0.3	17.9	16
95.79	0.4	0.3	19.7	14.5
107.6	0.4	0.3	22	13
118.3	0.4	0.3	24.5	11.5
124.7	0.4	0.3	26	11
137.1	0.4	0.3	28.5	9.9
67.28	0.5	0.37	17.2	20.5
72.13	0.5	0.37	18.5	19
79.34	0.5	0.37	20	17.5
87.08	0.5	0.37	22	16
95.79	0.5	0.37	24	14.5
107.6	0.5	0.37	27	13
118.3	0.5	0.37	30.5	11.5
124.7	0.5	0.37	32	11
137.1	0.5	0.37	35.5	9.9
52.2	0.75	0.55	19.4	27
57.41	0.75	0.55	21	24.5
61.17	0.75	0.55	22.5	23
67.28	0.75	0.55	25	21
72.13	0.75	0.55	26.5	19.5
79.34	0.75	0.55	29	18
87.08	0.75	0.55	31.5	16.5
95.79	0.75	0.55	35	15
107.6	0.75	0.55	38.5	13.5
118.3	0.75	0.55	43.5	12
124.7	0.75	0.55	45.5	11.5
137.1	0.75	0.55	50	10.5
35	1	0.75	17.9	40
38.49	1	0.75	19.6	36.5
41.01	1	0.75	20.5	34.5
45.1	1	0.75	22.5	31.5
52.2	1	0.75	26.5	27
57.41	1	0.75	29	24.5
61.17	1	0.75	31	23
67.28	1	0.75	34	21
72.13	1	0.75	36.5	19.5
79.34	1	0.75	39.5	18
87.08	1	0.75	43	16.5
95.79	1	0.75	47.5	15
107.6	1	0.75	53	13.5
118.3	1	0.75	59	12
124.7	1	0.75	62	11.5
137.1	1	0.75	68	10.5

BF30

i	HP_1	KW_1	M_2 daNm	n_2
21.85	1.5	1.1	16.1	65
24.03	1.5	1.1	17.8	59
28.23	1.5	1.1	21	50
31.05	1.5	1.1	23	45.5
35	1.5	1.1	26	40
38.49	1.5	1.1	28.5	36.5
41.01	1.5	1.1	30	34.5
45.1	1.5	1.1	33	31.5
52.2	1.5	1.1	38.5	27
57.41	1.5	1.1	42.5	24.5
61.17	1.5	1.1	45.5	23
67.28	1.5	1.1	50	21
72.13	1.5	1.1	53	19.5
79.34	1.5	1.1	58	18
87.08	1.5	1.1	63	16.5
95.79	1.5	1.1	70	15
9.99	2	1.5	10.1	141
12.91	2	1.5	13.1	109
16	2	1.5	16.2	88
17.65	2	1.5	17.9	80
19.41	2	1.5	19.6	73
21.85	2	1.5	22	65
24.03	2	1.5	24	59
28.23	2	1.5	28.5	50
31.05	2	1.5	31	45.5
35	2	1.5	35.5	40
38.49	2	1.5	39	36.5
41.01	2	1.5	41.5	34.5
45.1	2	1.5	45	31.5
52.2	2	1.5	53	27
57.41	2	1.5	58	24.5
61.17	2	1.5	62	23
67.28	2	1.5	68	21
8.07	3	2.2	12	174
9.99	3	2.2	14.9	141
12.91	3	2.2	19.2	109
16	3	2.2	23.5	88
17.65	3	2.2	26	80
19.41	3	2.2	28.5	73
21.85	3	2.2	32	65
24.03	3	2.2	35.5	59
28.23	3	2.2	42	50
31.05	3	2.2	46	45.5
35	3	2.2	52	40
38.49	3	2.2	57	36.5
41.01	3	2.2	60	34.5
45.1	3	2.2	66	31.5

BF40

i	HP_1	KW_1	M_2 daNm	n_2
78.55	0.75	0.55	29	18
83.91	0.75	0.55	30.5	17
92.31	0.75	0.55	33.5	15.5
101	0.75	0.55	37.5	14
111.1	0.75	0.55	40	13
124.5	0.75	0.55	45.5	11.5
137	0.74	0.55	50	10.5
53.82	1	0.75	27	26.5
61.25	1	0.75	31	23
67.38	1	0.75	34	21
71.4	1	0.75	35.5	20
78.55	1	0.75	39.5	18
83.91	1	0.75	42	17
92.31	1	0.75	46	15.5
101	1	0.75	51	14
111.1	1	0.075	55	13
124.5	1	0.075	62	11.5
137	1	0.075	68	10.5
37.64	1.5	1.1	28	37.5
41.42	1.5	1.1	30.5	34
45.56	1.5	1.1	33.5	31
48.92	1.5	1.1	36	29
53.82	1.5	1.1	39.5	26.5
61.25	1.5	1.1	45.5	23
67.38	1.5	1.1	50	21
71.4	1.5	1.1	52	20
78.55	1.5	1.1	58	18
83.91	1.5	1.1	61	17
92.31	1.5	1.1	67	15.5
101	1.5	1.1	75	14
111.1	1.5	1.1	80	13
124.5	1.5	1.1	91	11.5
137	1.5	1.1	100	10.5
21.6	2	1.5	22	65
23.77	2	1.5	24	59
26.86	2	1.5	27	53
29.55	2	1.5	30	47.5
34.21	2	1.5	34.5	41
37.64	2	1.5	38	37.5
41.42	2	1.5	42	34
45.56	2	1.5	46	31
48.92	2	1.5	49	29
53.82	2	1.5	54	26.5
61.25	2	1.5	62	23
67.38	2	1.5	68	21
71.4	2	1.5	71	20
78.55	2	1.5	79	18
83.91	2	1.5	84	17
92.31	2	1.5	92	15.5
101	2	1.5	102	14
111.1	2	1.5	110	13
7.62	3	2.2	11.4	184

BF40

i	HP_1	KW_1	M_2 daNm	n_2
9.48	3	2.2	14.1	148
11.79	3	2.2	17.6	119
15.02	3	2.2	22	94
17.35	3	2.2	25.5	81
19.09	3	2.2	28	74
21.6	3	2.2	32	65
23.77	3	2.2	35.5	59
26.86	3	2.2	39.5	53
29.55	3	2.2	44	47.5
34.21	3	2.2	51	41
37.64	3	2.2	56	37.5
41.42	3	2.2	61	34
45.56	3	2.2	67	31
48.92	3	2.2	72	29
53.82	3	2.2	79	26.5
61.25	3	2.2	91	23
67.38	3	2.2	100	21
71.4	3	2.2	105	20
7.62	4	3	15.3	187
9.48	4	3	19.1	150
11.79	4	3	23.5	121
15.02	4	3	30	95
17.35	4	3	34.5	82
19.09	4	3	38	75
21.6	4	3	43	66
23.77	4	3	47.5	60
26.86	4	3	54	53
29.55	4	3	59	48.5
34.21	4	3	68	42
37.64	4	3	75	38
41.42	4	3	83	34.5
45.56	4	3	90	31.5
48.92	4	3	97	29.5
53.82	4	3	108	26.5
7.62	5.5	4	20	187
9.48	5.5	4	25	150
11.79	5.5	4	31.5	121
15.02	5.5	4	40	95
17.35	5.5	4	46.5	82
19.09	5.5	4	50	75
21.6	5.5	4	57	66
23.77	5.5	4	63	60
26.86	5.5	4	72	53
29.55	5.5	4	78	48.5
34.21	5.5	4	90	42
37.64	5.5	4	100	38
41.42	5.5	4	110	34.5
7.62	7.5	5.5	28	187
9.48	7.5	5.5	35	150
11.79	7.5	5.5	43	121
15.02	7.5	5.5	55	95
17.35	7.5	5.5	64	82
19.09	7.5	5.5	70	75
21.6	7.5	5.5	79	66
23.77	7.5	5.5	87	60

021-33114819
021-33902458
آدرس : تهران - سعدی جنوبی - کوچه بانک تجارت - پلاک 5

BF50

i	HP_1	KW_1	M_2 daNm	n_2
114	0.75	0.55	42	12.5
127.5	0.75	0.55	47.5	11
81.33	1	0.75	40.5	17.5
90.24	1	0.75	44.5	16
100.9	1	0.75	51	14
114	1	0.75	57	12.5
127.5	1	0.75	65	11
56.86	1.5	1.1	42	25
63.59	1.5	1.1	46.5	22.5
72.72	1.5	1.1	53	19.5
81.33	1.5	1.1	60	17.5
90.24	1.5	1.1	65	16
100.9	1.5	1.1	75	14
114	1.5	1.1	84	12.5
127.5	1.5	1.1	95	11
42.15	2	1.5	42.5	33.5
47.14	2	1.5	47.5	30
56.86	2	1.5	57	25
63.59	2	1.5	63	22.5
72.72	2	1.5	73	19.5
81.33	2	1.5	81	17.5
90.24	2	1.5	89	16
100.9	2	1.5	102	14
114	2	1.5	114	12.5
127.5	2	1.5	130	11
23.14	3	2.2	34	61
25.88	3	2.2	38	55
31.73	3	2.2	47	44.5
35.49	3	2.2	53	39.5
42.15	3	2.2	62	33.5
47.14	3	2.2	70	30
56.86	3	2.2	84	25
63.59	3	2.2	93	22.5
72.72	3	2.2	107	19.5
81.33	3	2.2	120	17.5
90.24	3	2.2	131	16
100.9	3	2.2	150	14
10.68	4	3	21.5	133
14.65	4	3	29.5	97
16.7	4	3	33	86
18.68	4	3	37	77
23.14	4	3	46	62
25.88	4	3	52	55
31.73	4	3	63	45
35.49	4	3	70	40.5
42.15	4	3	84	34
47.14	4	3	93	30.5
56.86	4	3	114	25
63.59	4	3	127	22.5
72.72	4	3	143	20
81.33	4	3	163	17.5
7.71	5.5	4	20.5	185
10.68	5.5	4	28.5	133

BF50

i	HP_1	KW_1	M_2 daNm	n_2
14.65	5.5	4	39	97
16.7	5.5	4	44	86
18.68	5.5	4	49.5	77
23.14	5.5	4	61	62
25.88	5.5	4	69	55
31.73	5.5	4	84	45
35.49	5.5	4	94	40.5
42.15	5.5	4	112	34
47.14	5.5	4	125	30.5
56.86	5.5	4	152	25
7.71	7.5	5.5	28	185
10.68	7.5	5.5	39	133
14.65	7.5	5.5	54	97
16.7	7.5	5.5	61	86
18.68	7.5	5.5	68	77
23.14	7.5	5.5	84	62
25.88	7.5	5.5	95	55
31.73	7.5	5.5	116	45
35.49	7.5	5.5	129	40.5
42.15	7.5	5.5	154	34
7.71	10	7.5	38.5	185
10.68	10	7.5	53	133
14.65	10	7.5	73	97
16.7	10	7.5	83	86
18.68	10	7.5	93	77
23.14	10	7.5	115	62
25.88	10	7.5	130	55
31.73	10	7.5	159	45
7.71	12.5	9	49	185
10.68	12.5	9	68	133
14.65	12.5	9	93	97
16.7	12.5	9	105	86
18.68	12.5	9	117	77
7.71	15	11	55	190
10.68	15	11	76	137
16.7	15	11	119	88

BF60

i	HP_1	KW_1	M_2 daNm	n_2
93.44	1.5	1.1	70	15
103.7	1.5	1.1	75	14
113.1	1.5	1.1	84	12.5
125.5	1.5	1.1	91	11.5
72.15	2	1.5	73	19.5
80.05	2	1.5	81	17.5
93.44	2	1.5	95	15
103.7	2	1.5	102	14
113.1	2	1.5	114	12.5
125.5	2	1.5	124	11.5
46.16	3	2.2	68	30.5
54.44	3	2.2	80	26
60.4	3	2.2	89	23.5
72.15	3	2.2	107	19.5
80.05	3	2.2	120	17.5
93.44	3	2.2	140	15
103.7	3	2.2	150	14
113.1	3	2.2	168	12.5
125.5	3	2.2	182	11.5
31.2	4	3	62	46
34.62	4	3	69	41.5
41.6	4	3	83	34.5
46.16	4	3	92	31
54.44	4	3	108	26.5
60.4	4	3	119	24
72.15	4	3	143	20
80.05	4	3	159	18
93.44	4	3	184	15.5
103.7	4	3	200	14
113.1	4	3	220	13
125.5	4	3	245	11.5
14.24	5.5	4	38	100
16.96	5.5	4	45	84
18.81	5.5	4	50	76
22.58	5.5	4	60	63
25.05	5.5	4	67	57
31.2	5.5	4	83	46
34.62	5.5	4	92	41.5
41.6	5.5	4	110	34.5
46.16	5.5	4	123	31
54.44	5.5	4	1440	26.5
60.4	5.5	4	159	24
72.15	5.5	4	191	20
80.05	5.5	4	210	18
93.44	5.5	4	245	15.5
103.7	5.5	4	270	14
7.74	7.5	5.5	28.5	184
10.31	7.5	5.5	38	138
14.24	7.5	5.5	52	100
16.96	7.5	5.5	62	84
18.81	7.5	5.5	69	76
22.58	7.5	5.5	83	63
25.05	7.5	5.5	92	57

BF60

i	HP_1	KW_1	M_2 daNm	n_2
31.2	7.5	5.5	114	46
34.62	7.5	5.5	126	41.5
41.6	7.5	5.5	152	34.5
46.16	7.5	5.5	169	31
54.44	7.5	5.5	198	26.5
60.4	7.5	5.5	215	24
72.15	7.5	5.5	260	20
7.74	10	7.5	38.5	184
10.31	10	7.5	51	138
14.24	10	7.5	71	100
16.96	10	7.5	85	84
18.81	10	7.5	94	76
22.58	10	7.5	113	63
25.05	10	7.5	125	57
31.2	10	7.5	155	46
34.62	10	7.5	172	41.5
41.6	10	7.5	205	34.5
46.16	10	7.5	230	31
54.44	10	7.5	270	26.5
7.74	12.5	9	49	184
10.31	12.5	9	65	138
14.24	12.5	9	90	100
16.96	12.5	9	108	84
18.81	12.5	9	119	76
22.58	12.5	9	144	63
25.05	12.5	9	159	57
31.2	12.5	9	197	46
34.62	12.5	9	215	41.5
41.6	12.5	9	260	34.5
7.74	15	11	55	189
10.31	15	11	73	142
14.24	15	11	101	103
16.96	15	11	120	87
18.81	15	11	134	78
22.58	15	11	161	65
25.05	15	11	178	59
31.2	15	11	220	47
34.62	15	11	245	42.5
7.74	20	15	75	189
10.31	20	15	100	142
14.24	20	15	139	103
16.96	20	15	164	87
18.81	20	15	183	78
7.74	25	18.5	93	189
10.31	25	18.5	124	142

BF70

i	HP_1	KW_1	M_2 daNm	n_2
122.7	3	2.2	182	11.5
81.82	4	3	163	17.5
95.46	4	3	191	15
105.2	4	3	210	13.5
122.7	4	3	235	12
61.94	5.5	4	166	23
72.26	5.5	4	191	20
81.82	5.5	4	215	17.5
95.46	5.5	4	250	15
105.2	5.5	4	280	13.5
122.7	5.5	4	315	12
43.02	7.5	5.5	156	33.5
47.82	7.5	5.5	175	30
55.79	7.5	5.5	205	25.5
61.94	7.5	5.5	225	23
72.26	7.5	5.5	260	20
81.82	7.5	5.5	300	17.5
95.46	7.5	5.5	350	15
105.2	7.5	5.5	385	13.5
122.7	7.5	5.5	435	12
31.84	10	7.5	159	45
36.88	10	7.5	183	39
43.02	10	7.5	210	33.5
47.82	10	7.5	235	30
55.79	10	7.5	280	25.5
61.94	10	7.5	310	23
72.26	10	7.5	355	20
81.82	10	7.5	405	17.5
95.46	10	7.5	475	15
105.2	10	7.5	530	13.5
122.7	10	7.5	590	12
24.55	12.5	9	156	58
27.29	12.5	9	171	53
31.84	12.5	9	200	45
36.88	12.5	9	230	39
43.02	12.5	9	270	33.5
47.82	12.5	9	300	30
55.79	12.5	9	355	25.5
61.94	12.5	9	390	23
72.26	12.5	9	450	20
81.82	12.5	9	510	17.5
95.45	12.5	9	600	15
21.04	15	11	150	70
24.55	15	11	175	60
27.29	15	11	194	54
31.84	15	11	225	46
36.88	15	11	260	40
43.02	15	11	305	34

BF70

i	HP_1	KW_1	M_2 daNm	n_2
47.82	15	11	335	31
55.79	15	11	395	26.5
61.94	15	11	435	24
72.26	15	11	510	20.5
81.82	15	11	580	18
14.9	20	15	146	98
17.39	20	15	170	84
21.04	20	15	200	70
24.55	20	15	235	60
27.29	20	15	265	54
31.84	20	15	310	46
36.88	20	15	355	40
43.02	20	15	420	34
47.82	20	15	460	31
55.79	20	15	540	26.5
61.94	20	15	590	24
14.9	25	18.5	180	98
17.39	25	18.5	210	84
21.04	25	18.5	250	70
24.55	25	18.5	290	60
27.29	25	18.5	325	54
31.84	25	18.5	380	46
36.88	25	18.5	440	40
43.02	25	18.5	510	34
47.82	25	18.5	560	31
10.32	30	22	147	142
12.04	30	22	172	122
14.9	30	22	210	98
17.39	30	22	250	84
21.04	30	22	300	70
24.55	30	22	350	60
27.29	30	22	385	54
31.84	30	22	455	46
36.88	30	22	520	40
43.02	30	22	610	34
10.32	40	30	200	142
12.04	40	30	230	122
14.9	40	30	290	98
17.39	40	30	340	84
21.04	40	30	405	70
24.55	40	30	475	60
27.29	40	30	530	54
31.84	40	30	620	46

BF80

i	HP_1	KW_1	M_2 daNm	n_2
209.4	3	2.2	310	6.7
237.1	3	2.2	350	6
269.1	3	2.2	395	5.3
158.5	4	3	315	9
184.5	4	3	370	7.7
209.4	4	3	420	6.8
237.1	4	3	475	6
269.1	4	3	540	5.3
122.4	5.5	4	315	12
139.7	5.5	4	360	10.5
158.5	5.5	4	420	9
184.5	5.5	4	495	7.7
209.4	5.5	4	560	6.8
237.1	5.5	4	630	6
269.1	5.5	4	720	5.3
83.16	7.5	5.5	300	17.5
94.38	7.5	5.5	335	15.5
107.9	7.5	5.5	385	13.5
122.4	7.5	5.5	435	12
139.7	7.5	5.5	500	10.5
158.5	7.5	5.5	580	9
184.5	7.5	5.5	680	7.7
209.4	7.5	5.5	770	6.8
237.1	7.5	5.5	870	6
269.1	7.5	5.5	990	5.3
53.86	10	7.5	270	26.5
61.55	10	7.5	300	23.5
69.86	10	7.5	345	20.5
83.16	10	7.5	405	17.5
94.38	10	7.5	460	15.5
107.9	10	7.5	530	13.5
122.4	10	7.5	590	12
139.7	10	7.5	680	10.2
158.5	10	7.5	790	9
184.5	10	7.5	930	7.7
209.4	10	7.5	1050	6.8
237.1	10	7.5	1190	6
47.46	12.5	9	300	30
53.86	12.5	9	340	26.5
61.55	12.5	9	385	23.5
69.86	12.5	9	440	20.5
83.16	12.5	9	510	17.5
94.38	12.5	9	580	15.5
107.9	12.5	9	670	13.5
122.4	12.5	9	750	12
139.7	12.5	9	860	10.5
158.5	12.5	9	1000	9
184.5	12.5	9	1170	7.7
30.21	15	11	215	48.5
33.61	15	11	240	43.5
38.14	15	11	270	38.5
47.46	15	11	335	31
53.86	15	11	380	27.5

BF80

i	HP_1	KW_1	M_2 daNm	n_2
61.55	15	11	435	24
69.86	15	11	500	21
83.16	15	11	580	18
94.38	15	11	670	15.5
107.9	15	11	750	14
122.4	15	11	870	12
139.7	15	11	1000	10.5
158.5	15	11	1120	9.3
16.49	20	15	160	89
23.29	20	15	225	63
30.21	20	15	295	48.5
33.61	20	15	325	43.5
38.14	20	15	370	38.5
47.46	20	15	460	31
53.86	20	15	520	27.5
61.55	20	15	590	24
69.86	20	15	680	21
83.16	20	15	790	18
94.38	20	15	920	15.5
107.9	20	15	1020	14
122.4	20	15	1190	12
16.49	25	18.5	198	89
23.29	25	18.5	280	63
30.21	25	18.5	360	48.5
33.61	25	18.5	405	43.5
38.14	25	18.5	455	38.5
47.46	25	18.5	560	31
53.86	25	18.5	640	27.5
61.55	25	18.5	730	24
69.86	25	18.5	840	21
83.16	25	18.5	980	18
94.38	25	18.5	1130	15.5
11.42	30	22	164	128
16.49	30	22	235	89
23.29	30	22	330	63
30.21	30	22	430	48.5
33.61	30	22	480	43.5
38.14	30	22	540	38.5
47.46	30	22	670	31
53.86	30	22	760	27.5
61.55	30	22	870	24
69.86	30	22	1000	21
83.16	30	22	1160	18
11.42	40	30	220	128
16.49	40	30	320	89
23.29	40	30	450	63
30.21	40	30	590	48.5
33.61	40	30	650	43.5
38.14	40	30	740	38.5
47.46	40	30	920	31
53.86	40	30	1040	27.5

رهنما
تولید گیربکسهای صنعتی

BF90

i	HP_1	KW_1	M_2 daNm	n_2
259	4	3	520	5.5
198.8	5.5	4	530	7.2
232.6	5.5	4	610	6.2
259	5.5	4	690	5.5
154.8	7.5	5.5	570	9.2
178.6	7.5	5.5	650	8
198.8	7.5	5.5	720	7.2
232.6	7.5	5.5	840	6.2
259	7.5	5.5	950	5.5
107.5	10	7.5	530	13.5
119.7	10	7.5	590	12
139.1	10	7.5	680	10.5
154.8	10	7.5	770	9.2
178.6	10	7.5	890	8
198.8	10	7.5	990	7.2
232.6	10	7.5	1150	6.2
259	10	7.5	1300	5.5
80.85	12.5	9	500	18
90.02	12.5	9	560	16
107.5	12.5	9	670	13.5
119.7	12.5	9	750	12
139.1	12.5	9	860	10.5
154.8	12.5	9	980	9.2
178.6	12.5	9	1130	8
198.8	12.5	9	1260	7.2
232.6	12.5	9	1460	6.2
259	12.5	9	1640	5.5
70.69	15	11	500	21
80.85	15	11	560	18.5
90.02	15	11	630	16.5
107.5	15	11	750	14
119.7	15	11	840	12.5
139.1	15	11	1000	10.5
154.8	15	11	1100	9.5
178.6	15	11	1280	8.2
198.8	15	11	1410	7.4
232.6	15	11	1660	6.3
259	15	11	1840	5.7
46.43	20	15	450	31.5
51.7	20	15	500	28.5
63.49	20	15	620	23
70.69	20	15	680	21
80.85	20	15	770	18.5
90.02	20	15	860	16.5
107.5	20	15	1020	14
119.7	20	15	1140	12.5
139.1	20	15	1360	10.5
154.8	20	15	1500	9.5
178.6	20	15	1740	8.2
198.8	20	15	1930	7.4
46.43	25	18.5	560	31.5
51.7	25	18.5	610	28.5
63.49	25	18.5	760	23

BF90

i	HP_1	KW_1	M_2 daNm	n_2
70.69	25	18.5	840	21
80.85	25	18.5	950	18.5
90.02	25	18.5	1070	16.5
107.5	25	18.5	1260	14
119.7	25	18.5	1410	12.5
139.1	25	18.5	1680	10.5
154.8	25	18.5	1850	9.5
23.95	30	22	340	61
33.71	30	22	480	43.5
37.54	30	22	530	39
46.43	30	22	660	31.5
51.7	30	22	730	28.5
63.49	30	22	910	23
70.69	30	22	1000	21
80.85	30	22	1130	18.5
90.02	30	22	1270	16.5
107.5	30	22	1500	14
119.7	30	22	1680	12.5
139.1	30	22	2000	10.5
12.45	40	30	240	118
17.39	40	30	340	84
23.95	40	30	465	61
33.71	40	30	650	43.5
37.54	40	30	730	39
46.43	40	30	900	31.5
51.7	40	30	1000	28.5
63.49	40	30	1240	23
70.69	40	30	1360	21
80.85	40	30	1540	18.5
90.02	40	30	1730	16.5
107.5	40	30	2040	14

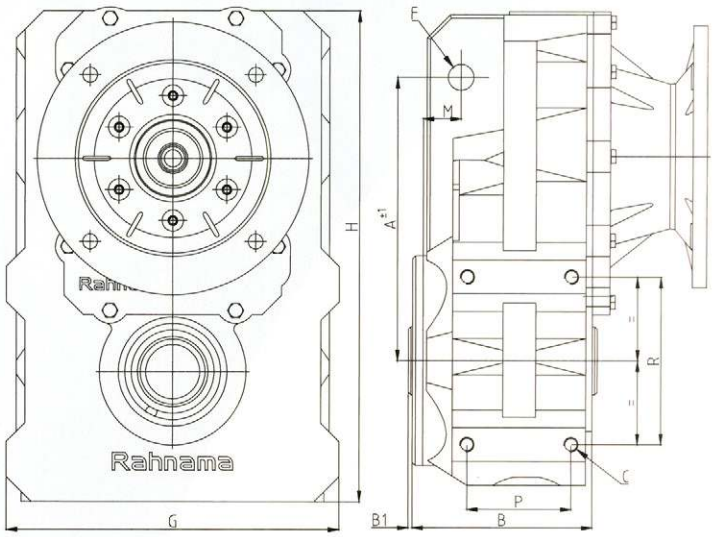

Code...4/

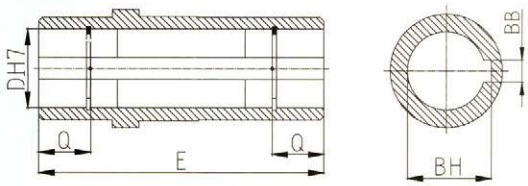

Code...5/

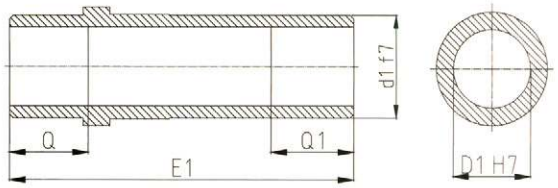

Code...1/

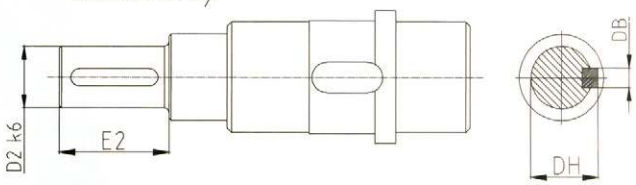

	30	40	50	60	70	80	90
A	210	242	270	340	377	--	--
B	129	152	164	185	229	--	--
B_1	7.5	7	6	7	6	--	--
d_1^{f7}	50	62	68	80	105	--	--
D^{H7}	35	40	50	60	70	--	--
E	141.5	166	182	202	240	--	--
D_1^{H7}	40	50	60	70	90	--	--
E_1	192	215	211	257	320	--	--
D_2^{k6}	40	50	60	70	90	--	--
E_2	80	100	120	140	180	--	--
F	15/17	21/23	25/27	25/27	29/32	--	--
M	36	33	44	53	76	--	--
G	246	270	306	375	450	--	--
H	350	395	470	568	650	--	--
P	75	95	100	110	140	--	--
R	130	140	160	200	240	--	--
C	M12x24	M12x24	M14x28	M16x30	M20x40	--	--
DB^{P9}	12	14	18	20	25	--	--
DH	43	53.5	64	74.5	95	--	--
BB^{P9}	10	12	14	18	20	--	--
BH	38.3	43.3	53.8	64.4	74.9	--	--
Q	40	40	50	60	70	--	--
Q_1	35	40	40	50	65	--	--

manaform: (086) 32211690 - 32248111

راندمان بالا،
پرقدرت با بدنه ای مستحکم،
قابلیت اطمینان برای کارکردهای سنگین و پیوسته

استفاده برای خطوط نورد لوله، فولاد، جرثقیل های سقفی و ...
با نسبت تبدیل های متفاوت و اندازه ۹۰ ÷ ۳۰

INDUSTRIAL GEARBOXES MANUFACTURER

Rahnama

INDUSTRIAL GEARBOXES MANUFACTURER

آدرس فروشگاه : خیابان سعدی جنوبی - کوچه بانک تجارت - پلاک 5
شماره های تماس:

02133951566
02133114819
09203117858

www.gearboxsahand.com